# Final Focus Magnet System

N. Ohuchi, M. Tawada, Z. Zhanguo,
N. Higashi, K. Tsuchiya

# IR-magnet cryostat

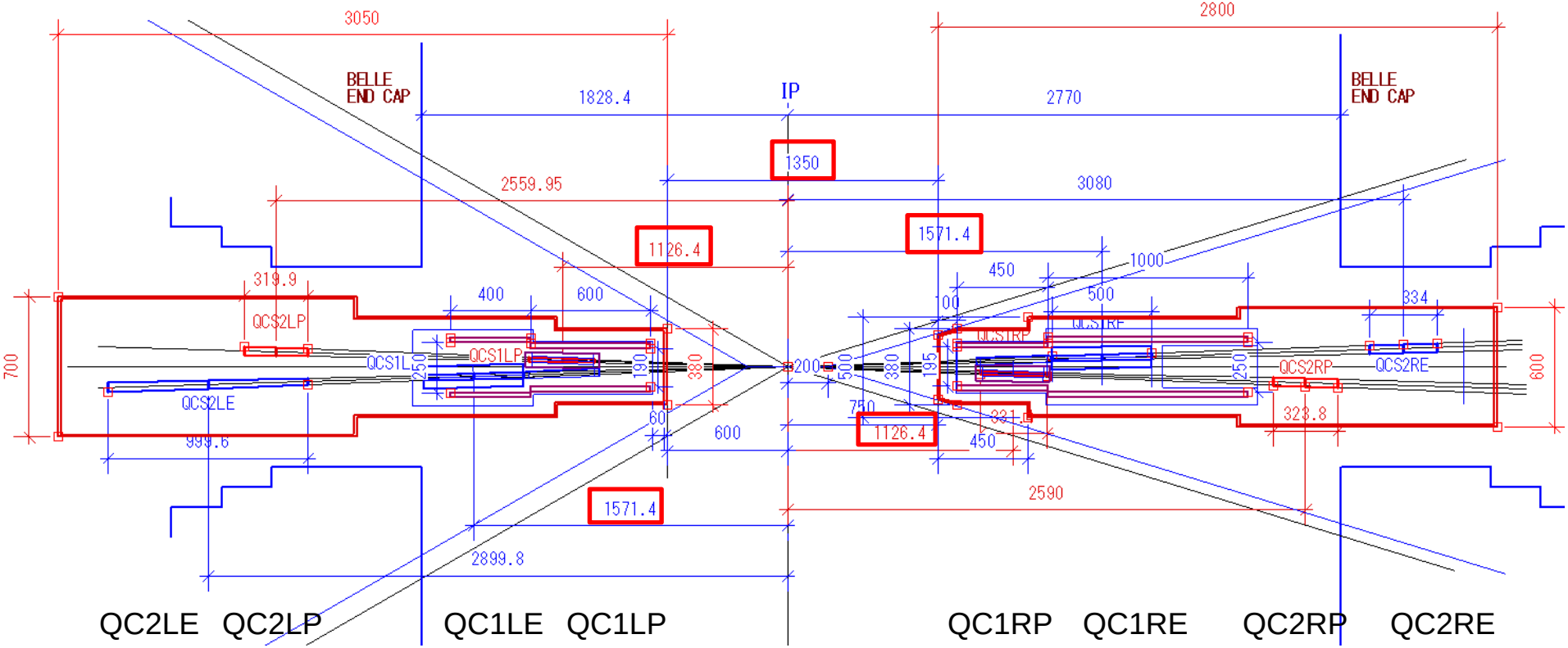

# QC1P(R/L)

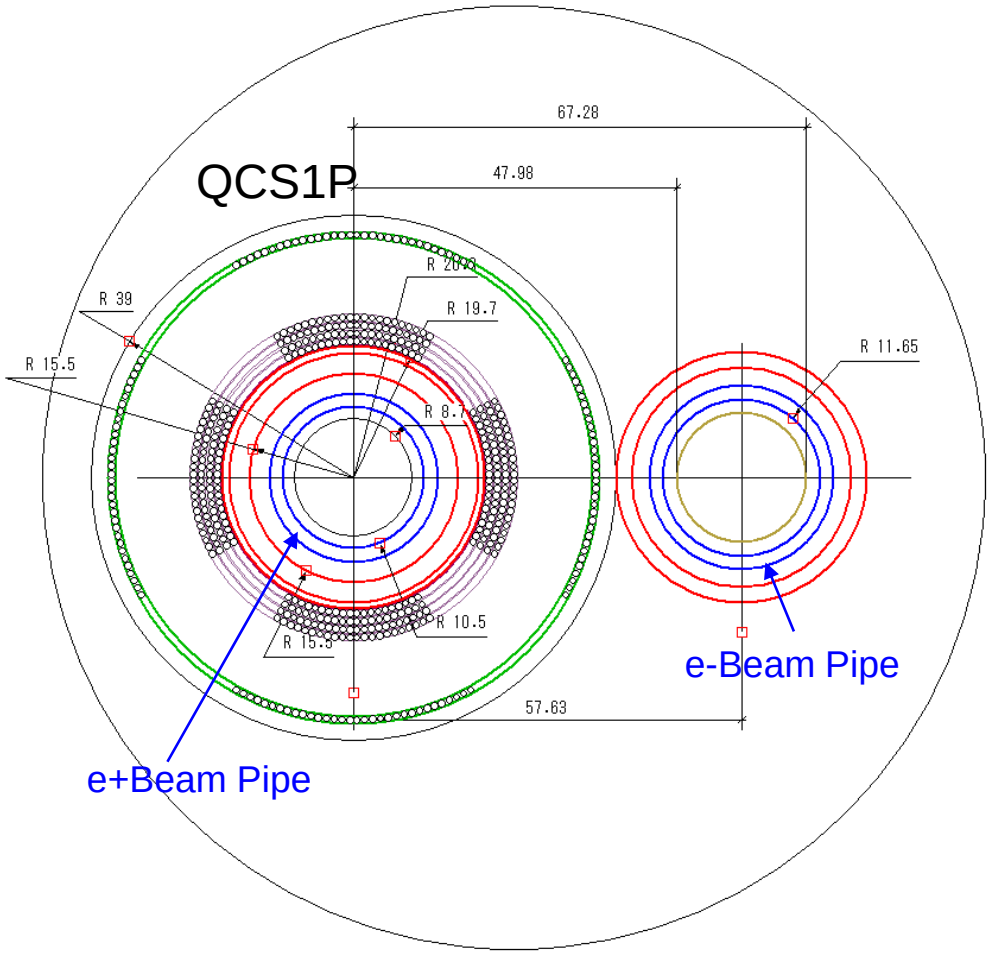


QCS1P Cross Section

1. Design integral field
   - Int. G=17.683 T(R), 17.772 T (L)
2. Main quadrupole configuration
   - 4 layer coils (wire coil)
     - (1st layer/2/3/4=10 turns/10/11/11)
3. Active shield coil
   - 1 layer coil (16 turns)
4. Superconducting wire
   - Outer dia.=1 mm
   - Cu Ration=1.2
   - Current= 730.53 A(R), 734.21 A(L)
   - Current density (SC area)= 2900 A/mm$^2$ (R), 2915 A/mm$^2$(L)
   - Current density (wire)=1318 A/mm$^2$ (R), 1325 A/mm$^2$ (L)
5. Cryostat bore=Beam pipe (room temp.)
   - Inner radius=10.5mm
6. Helium vessel bore without $LN_2$ shield
   - Inner radius=15.5mm

# Magnetic field characteristics of QC1P

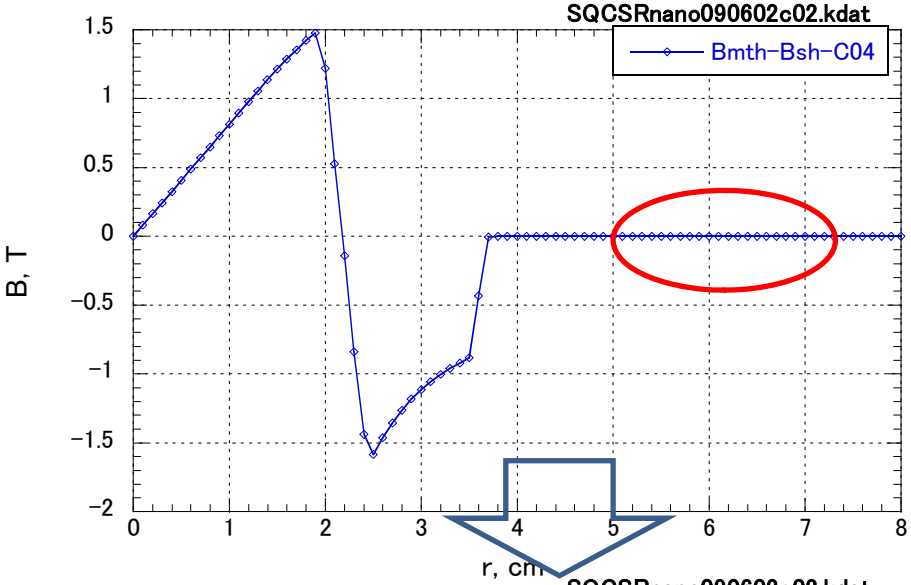


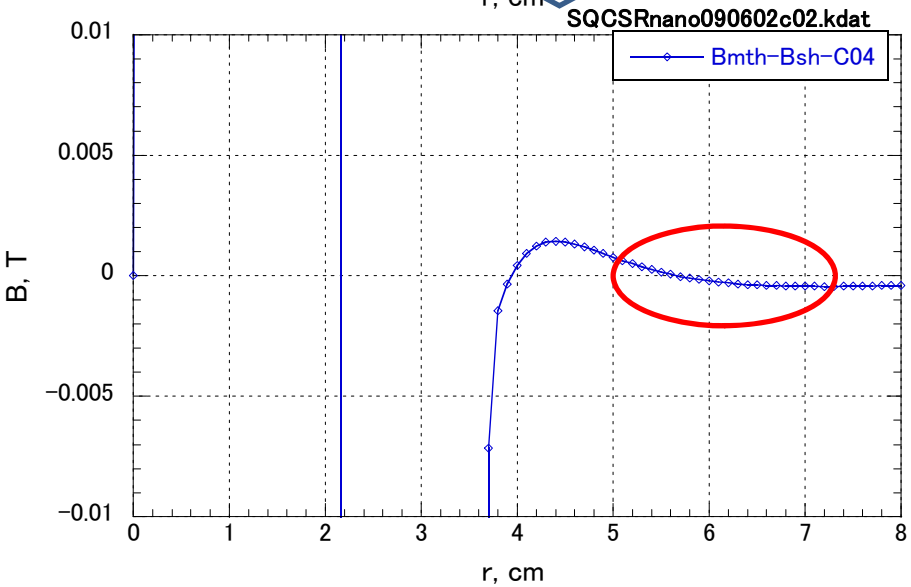


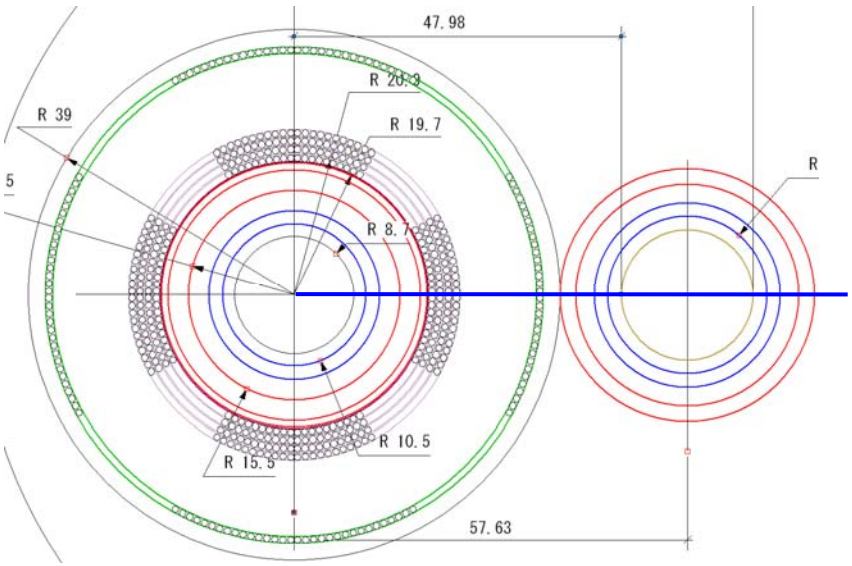


At the center of the magnet, the leak field on the e- beam line,
-10 Gauss < $B_{leak}$ < + 10 Gauss

# QCS1RP, LP 3D Design

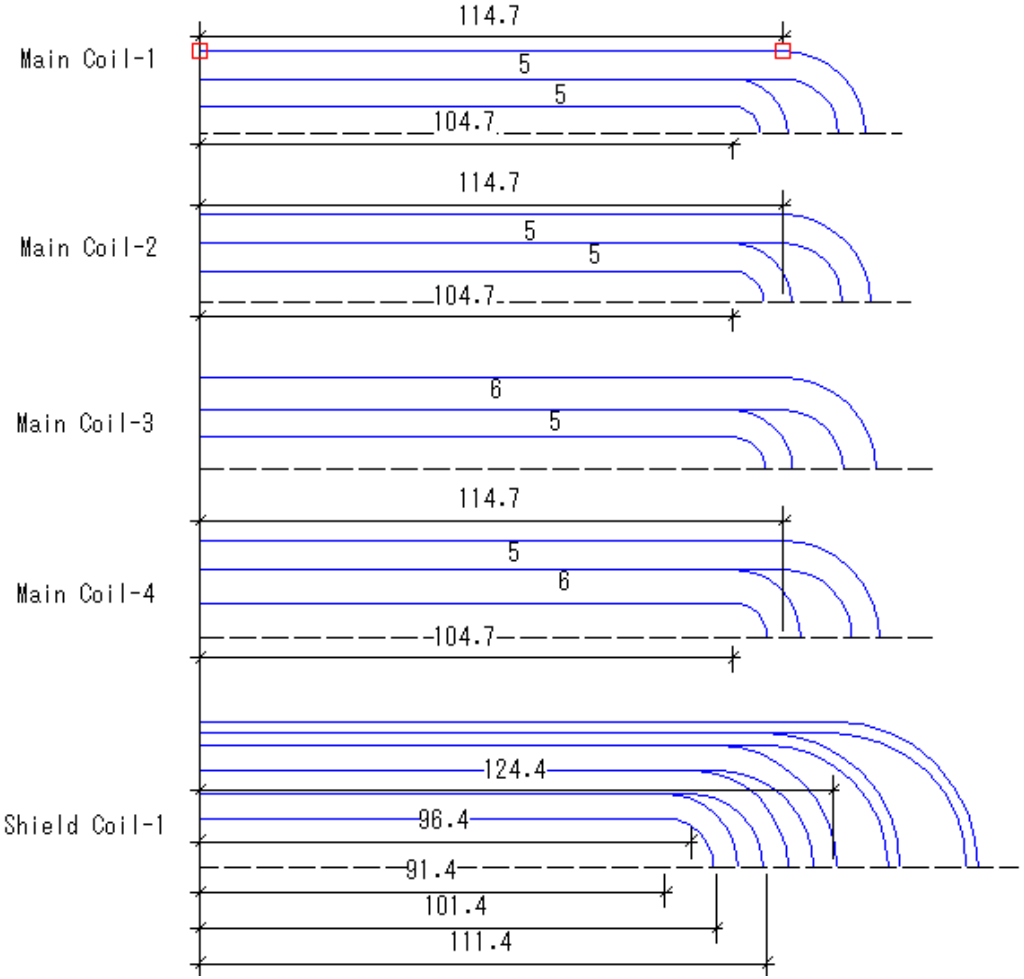


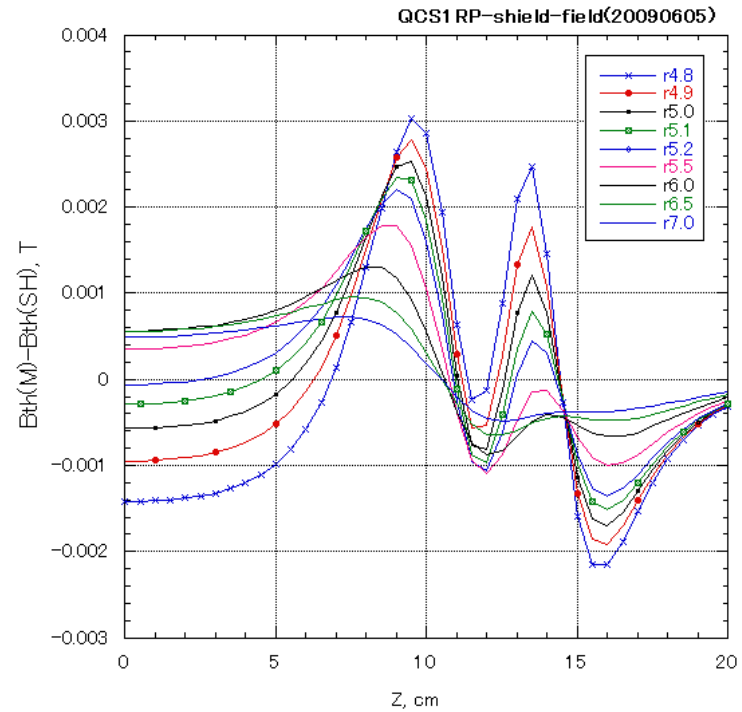


The position of r=0 corresponds to the positron beam center .
The position of r=5.4 cm corresponds to the left side of the beam envelop.

On the r=5.4 cm
-0.0011T<Leak field <0.0019T
Average leak field=0.00015T

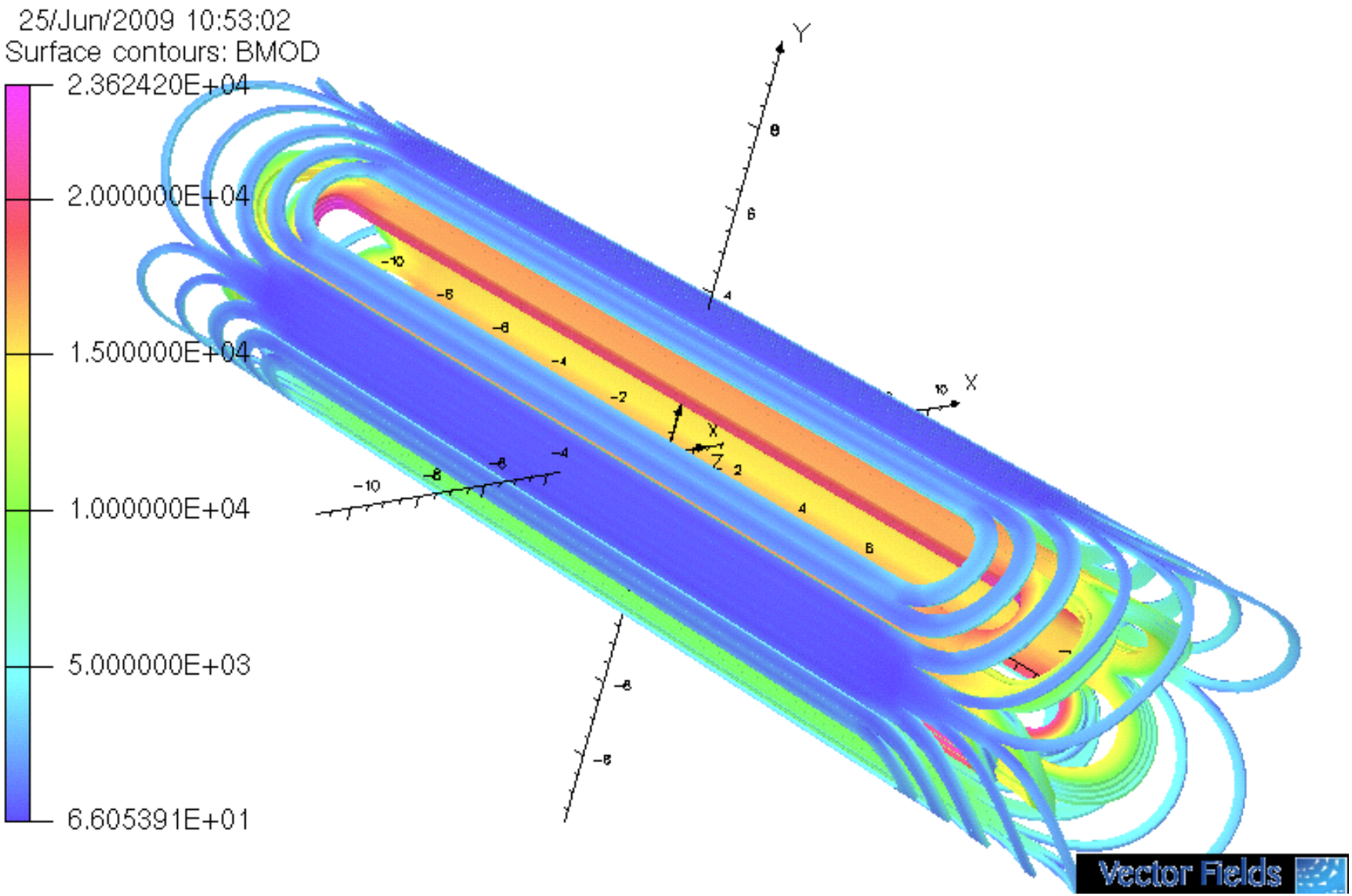
25/Jun/2009 10:53:02
Surface contours: BMOD
2.362420E+04
2.000000E+04
1.500000E+04
1.000000E+04
5.000000E+03
6.605391E+01
Y
X
Z
Vector Fields

# S.C. magnet parameters

| | G, T/m (Opt.) | Int. G, T (Opt.) | G, T/m (Design) | L, m | I, A |
|---|---|---|---|---|---|
| QCS2RE | 32.621 | 13.048 | 39.07 | 0.334 | 700 |
| QCS2RP | 13.718 | 6.585 | 21.52 | 0.306 | 450 |
| QCS1RE | 53.887 | 28.021 | 71.75 | 0.391 | 619.6 |
| QCS1RP | 55.261 | 17.683 | 72.62 | 0.243 | 730.5 |
| QCS1LP | 55.537 | 17.772 | 72.99 | 0.243 | 734.2 |
| QCS1LE | 57.424 | 29.860 | 76.46 | 0.391 | 660.3 |
| QCS2LP | 20.988 | 6.716 | 30.0 | 0.224 | 482 |
| QCS2LE | 15.405 | 15.405 | 15.5 | 0.994 | 497 |

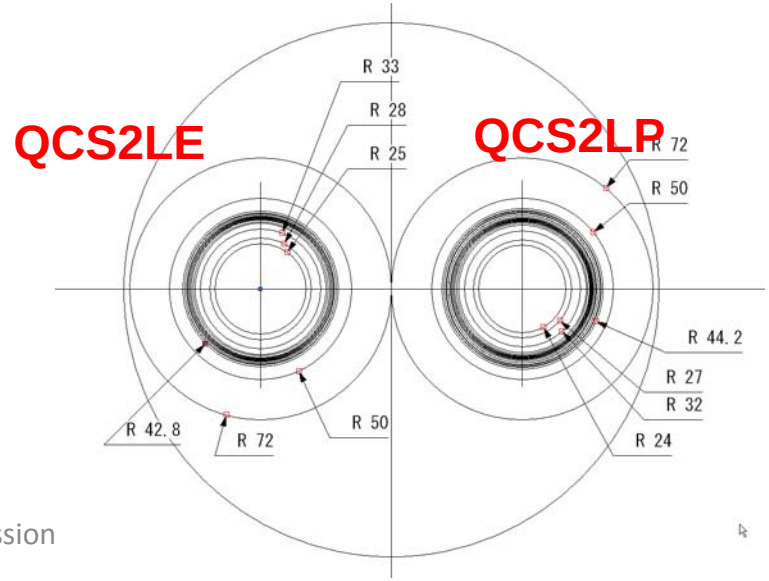

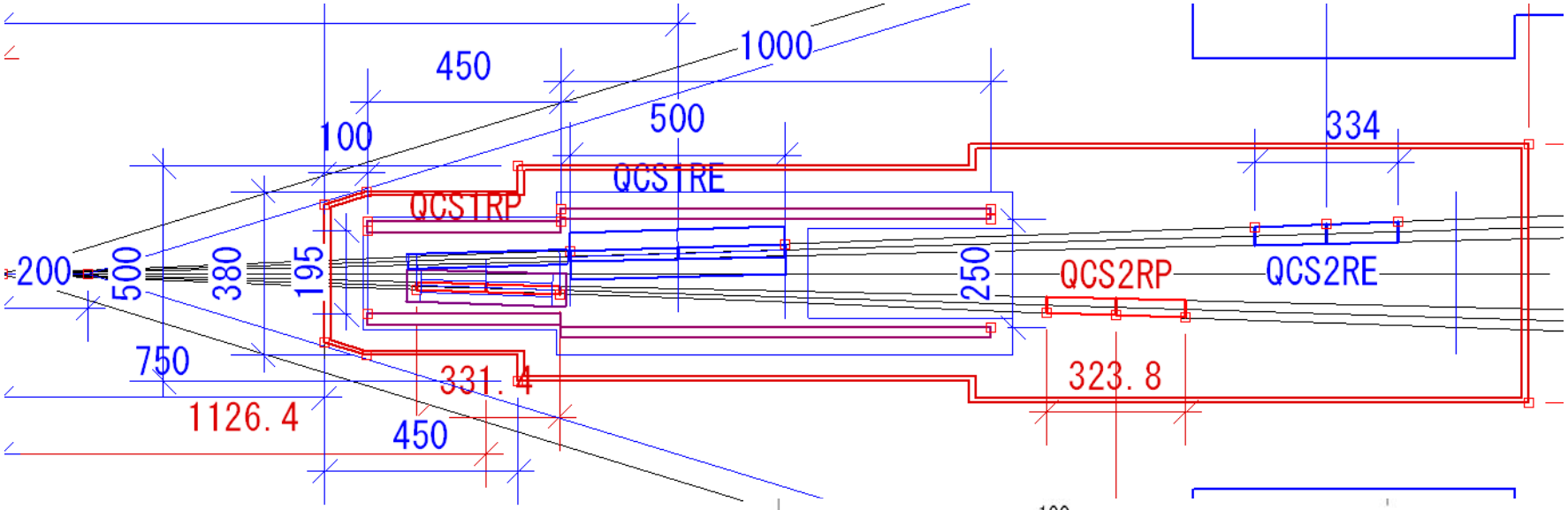


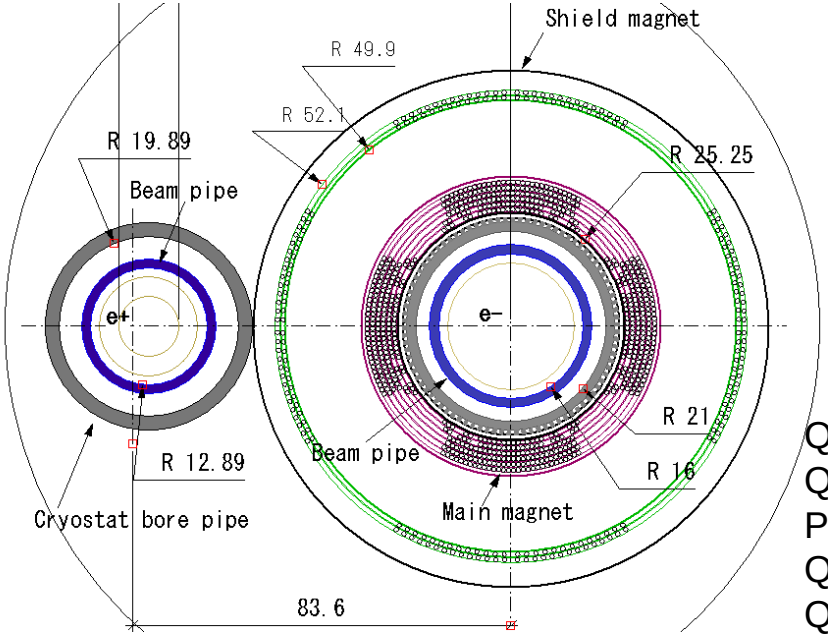


QC1RE

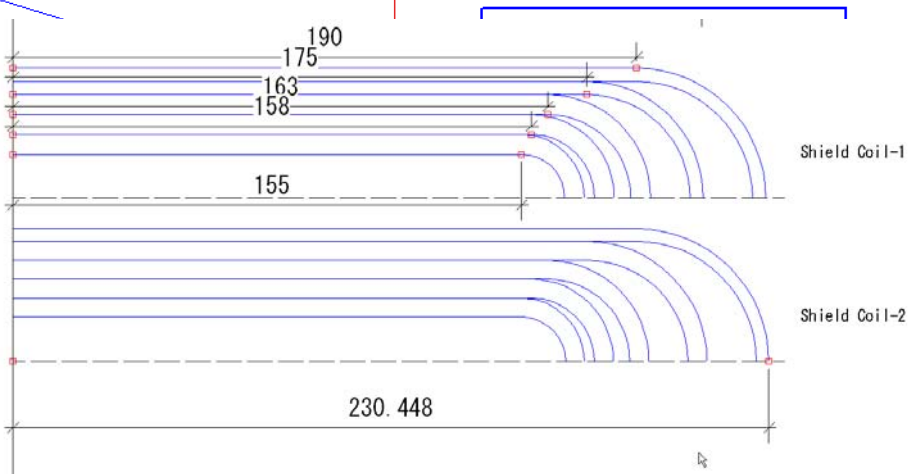


QCS1P-Coil Length：305.93mm [Magnet Length 370mm]
QCS1E-Coil Length：460.90mm [Magnet Length 500mm]
Position of the magnets（from IP）
QCS1P＝1126.4mm　(910mm : 5/1 optics )
QCS1E＝1571.4mm　(1460 mm)

# QC1P/E(Permanent Magnet System)

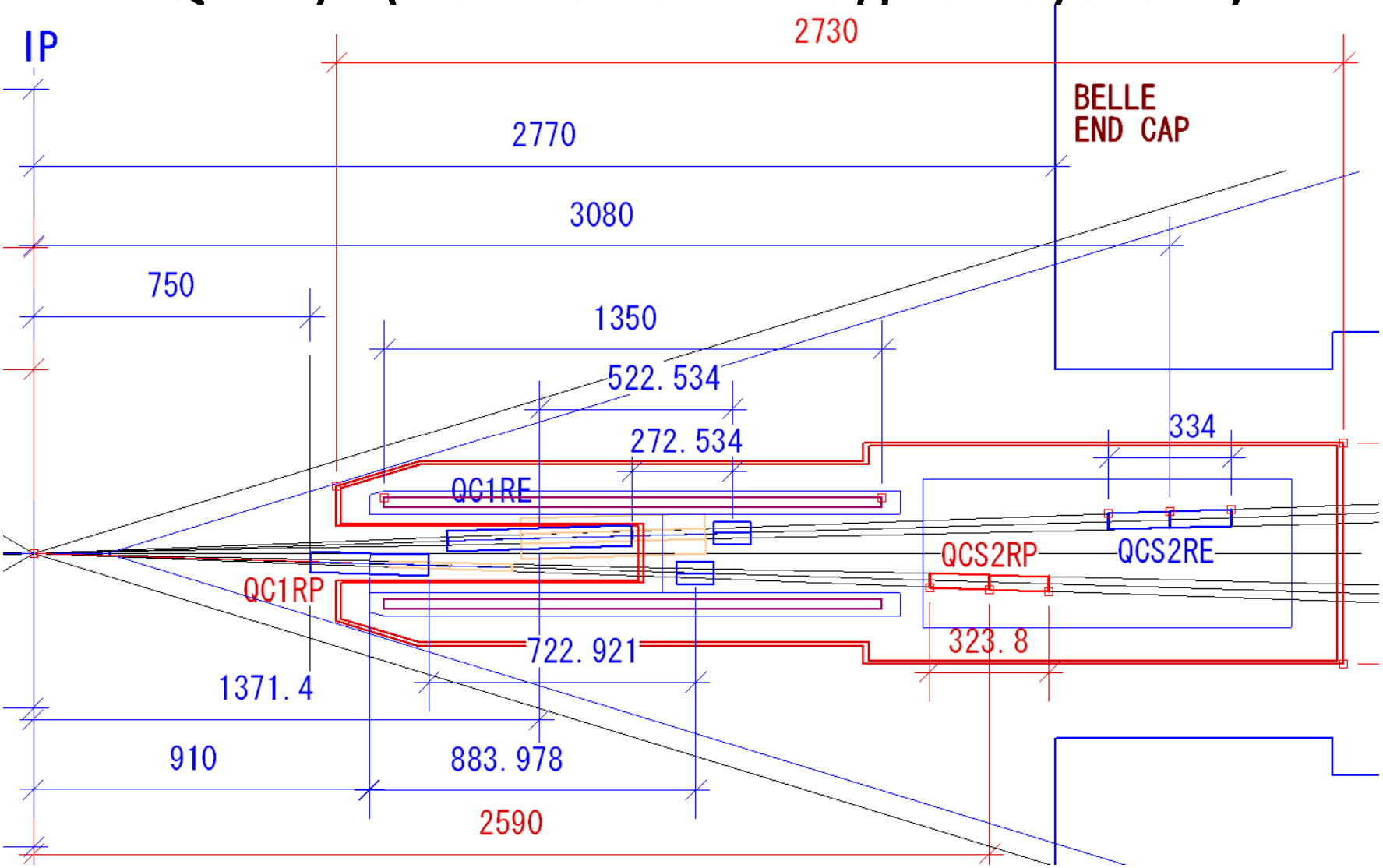


Energy:4S ⇒ 1S~ 5S : Quadrupole strength -11% ~ +2.7%

QC1P: 18 (T/m)×m, QC1E:30 (T/m) × m

# QC1P Permanent Quadrupole Magnet

Material: $Sm_2Co_{17}$ (R32HS)
$B_r$=1.12-1.20 T

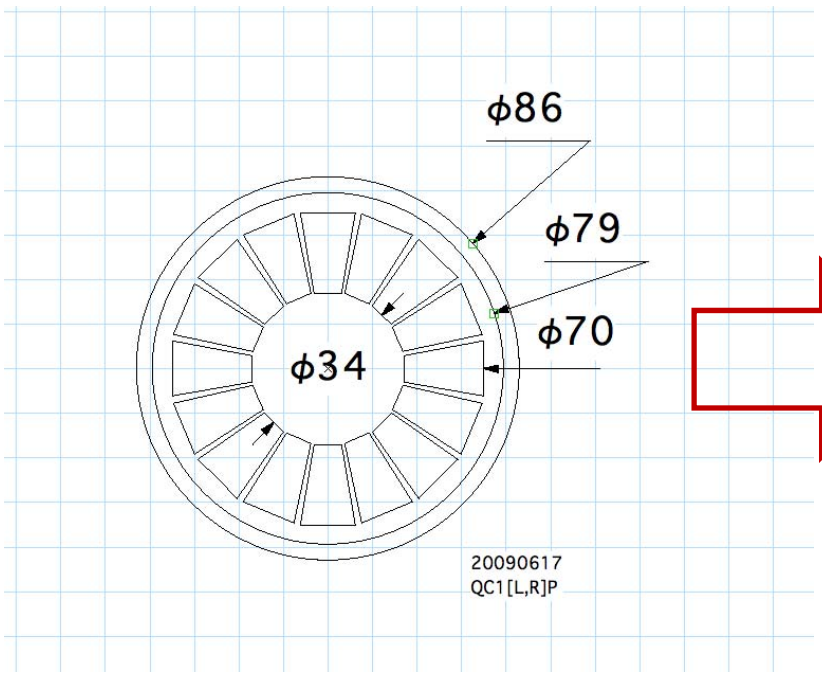


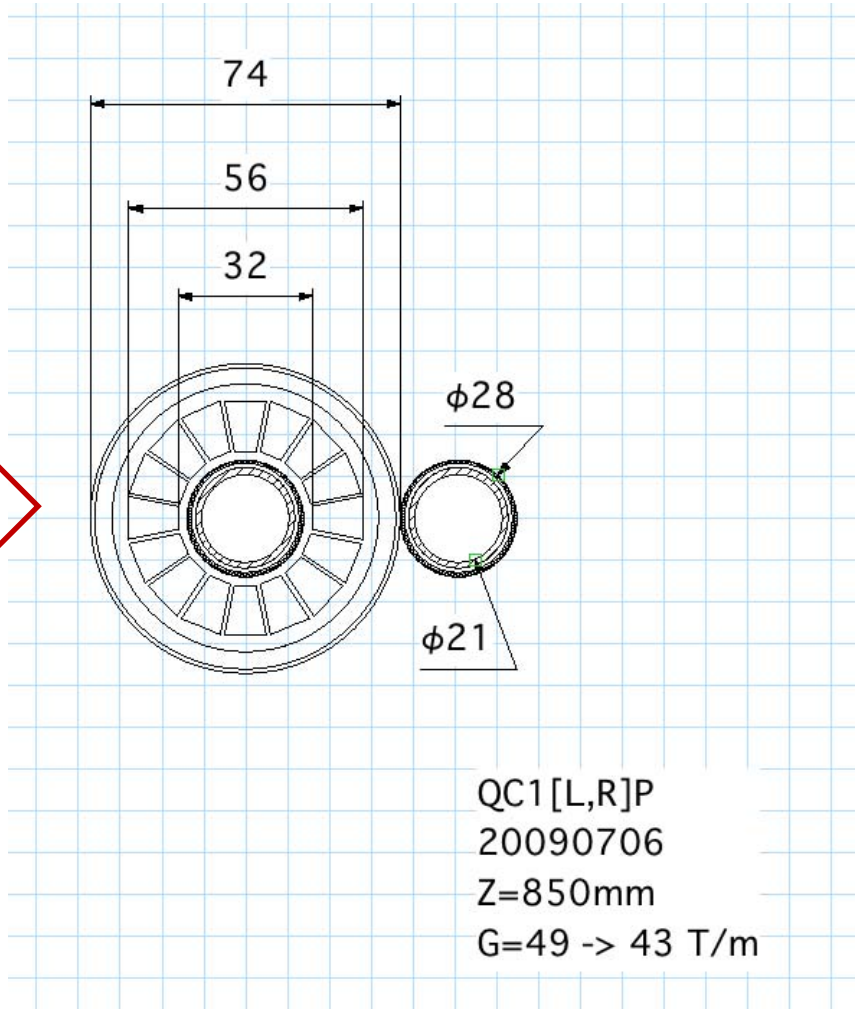


Magnet center position from IP=1100mm

# Summary

- The conceptual magnet designs of S.C. QC1P/E have been completed.
  - The detail design with cryostat should be studied.
- The 2D calculations of the other magnets are almost completed.
- The permanent magnet designs of QC1P/E combined with S.C. magnets started from the requirement of the beam dynamic apertures.